FARO
BARCELONA

STAN

ref. 43744 white
ref. 43745 black

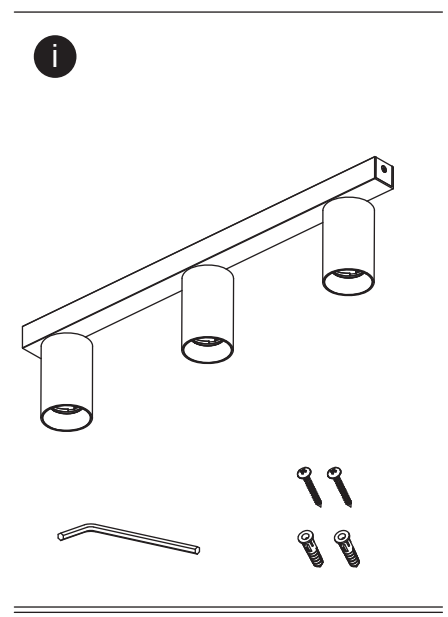

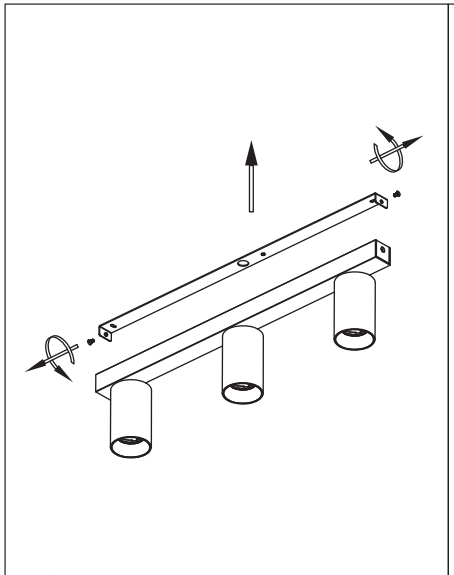

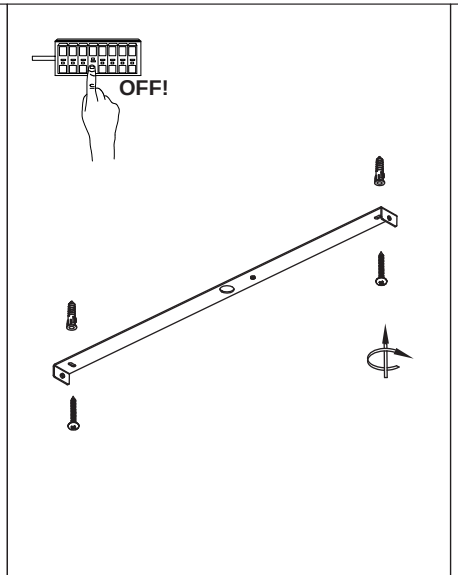

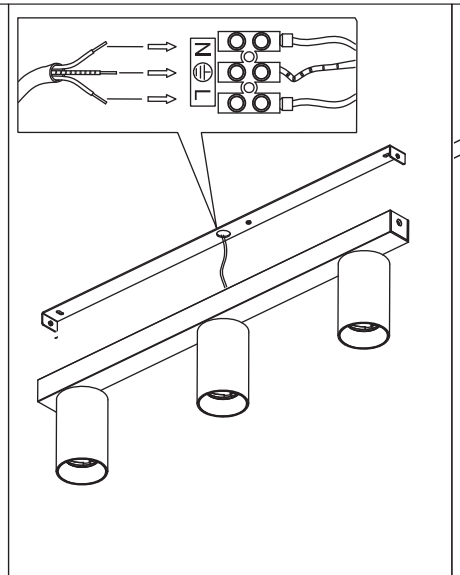

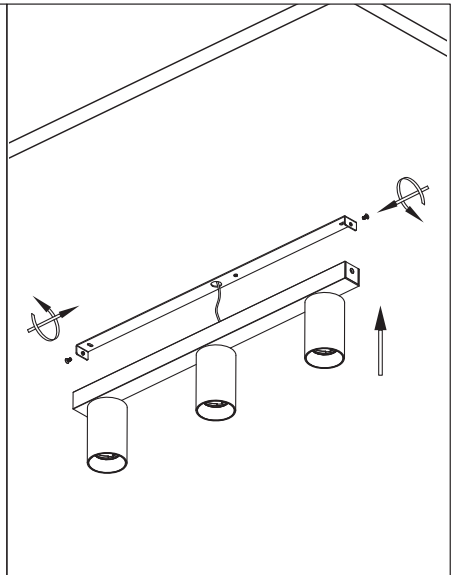

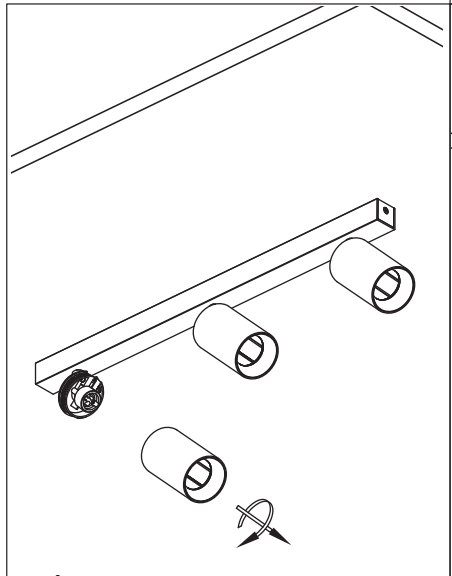

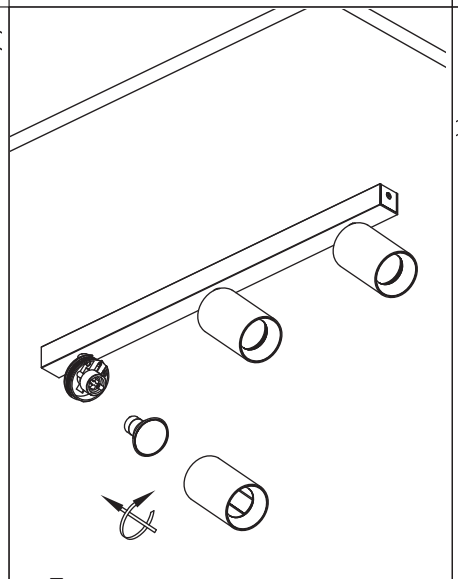

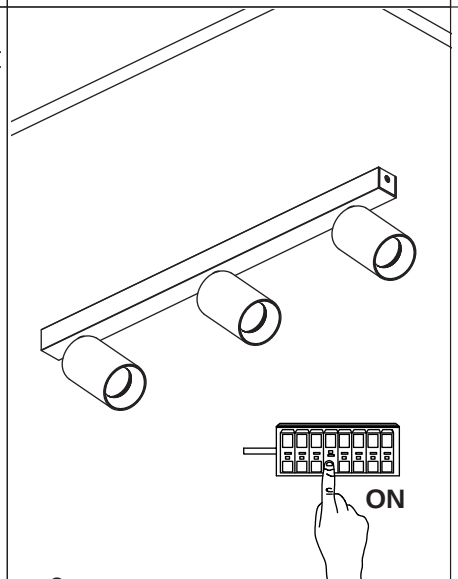

STAN lens accessories
not included. See **www.faro.es**

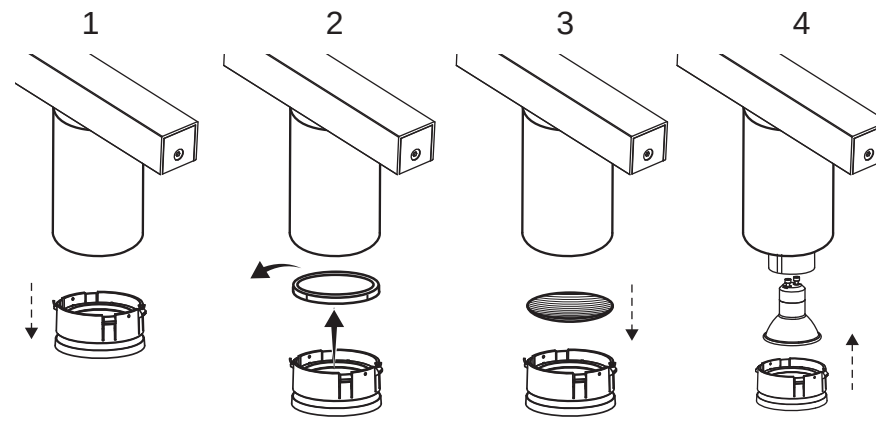

LIGHT SOURCE - FUENTE DE LUZ

3 x GU10 MAX 8W LED NO INCL.

TECHNICAL FEATURES - CARACTERISTICAS TÉCNICAS

100V-240V~50Hz/60Hz

35°
90°

LOREFAR, SL • B-58087479
Pol. Ind. Sta. Rita • 08755 Castellbisbal • Barcelona • Spain
faro@lorefar.com • www.faro.es